O3MiSCID, a Middleware for Pervasive Environments

Rémi Emonet, Dominique Vaufreydaz, Patrick Reignier, Julien Letessier

Rémi Emonet

INRIA Rhône-Alpes

SIPE06, Lyon, France

29, June 2006

Motivations

- Stimulating synergy in/between research teams
  - Software reuse
  - Software interoperability
- Simplifying conception of distributed applications
  - Unified communication means
  - Programmatic facilities
- Enabling higher level concepts

Outline

- Requirements
- Middleware presentation
  - Abstract architecture
  - Detailed architecture
- Examples
- Conclusions

Middleware Requirements

- Attractiveness and availability
  - Available to everyone
  - Low threshold, high ceiling
- Network efficiency
  - High bandwidth
  - Low latency

Middleware Requirements

- Robustness
- Ease of configuration
  - Dependencies between services
- Extensibility
  - Context awareness
  - Autonomous computing

Outline

- Requirements
- Middleware presentation
  - Abstract architecture
  - Detailed architecture
- Examples
- Conclusions

O3MiSCID

- **O**bject-**O**riented
- **O**pensource
- **Mi**ddleware for
- **S**ervices **C**onnection,
- **I**nspection and
- **D**iscovery

Abstract Layered Architecture

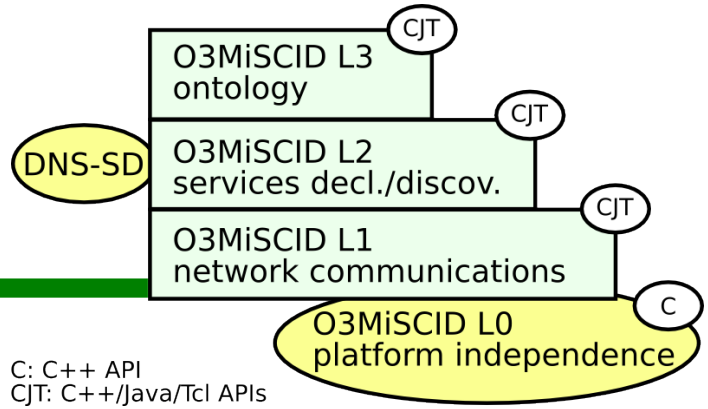

- Layer 1: Network Communications
  - Splitting network streams in messages
  - Arbitrary message content
- Layer 2: Services
  - Service declaration and advertisement
  - Service discovery and inspection
- Layer 3: Ontology
  - Semantic service description

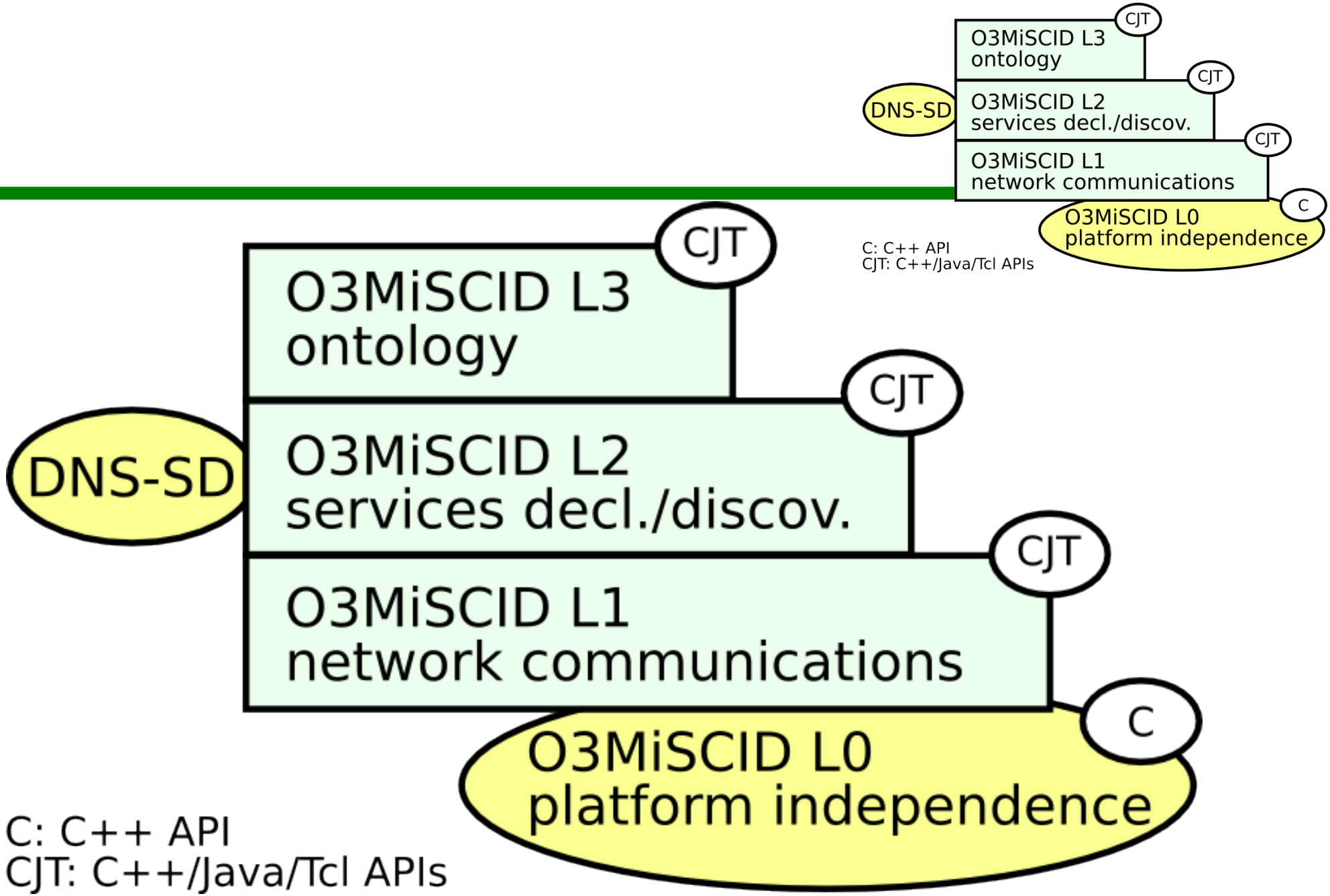
CJT
O3MiSCID L3
ontology
CJT
DNS-SD
O3MiSCID L2
services decl./discov.
CJT
O3MiSCID L1
network communications
C
O3MiSCID L0
platform independence
C: C++ API
CJT: C++/Java/Tcl APIs

Outline

- Requirements
- Middleware presentation
  - Abstract architecture
  - Detailed architecture
- Examples
- Conclusions

L1: Network Communications

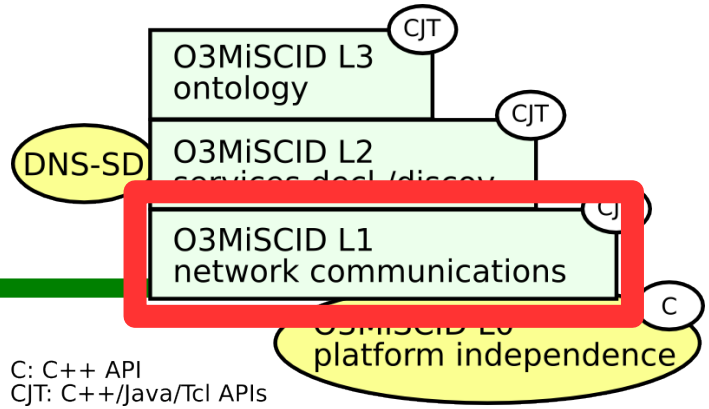

- Basic Interconnection Protocol (BIP)
  - Splits the communication stream into messages
  - 34-byte header
  - Allows arbitrary content type
- Programmatic facilities
  - Communication channel instantiation
  - Message interpretation: string, xml, binary

L2: Services - Declaration

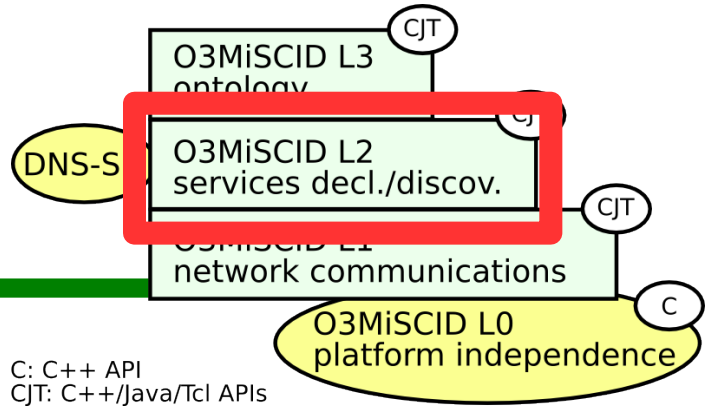

- Black box software unit
- Communication channels
  - Input, output, bidirectional
- Variables
  - Access rights
  - Remote modifications, modification subscription
- Control channel
  - Inspection, variable related queries

Example Services

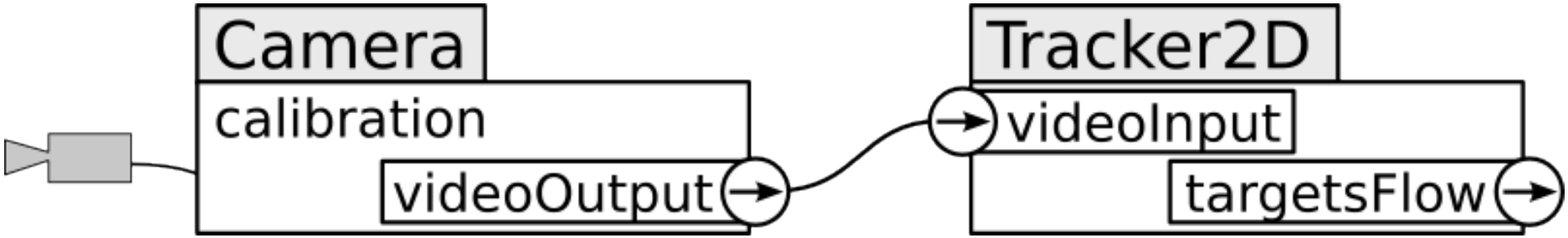

Example Service Declaration


```
service = registry.register("Camera");
service.addConnector("videoOutput",
                     "Frame by frame output", InOutputKind.Output);
service.addVariable("calibration", "Matrix4x4", "read");
...
```

Example Service Declaration (using XML)

```
<service name="Camera">
    <variable name="calibration">
        <access>read</access>
        <type>Matrix4x4</type>
    </variable>
    <output name="videoOutput">
        <description>Frame by frame output</description>
    </output>
</service>
```

service = registry.**registerFromXML**(xmlStream);

L2: Services - Discovery

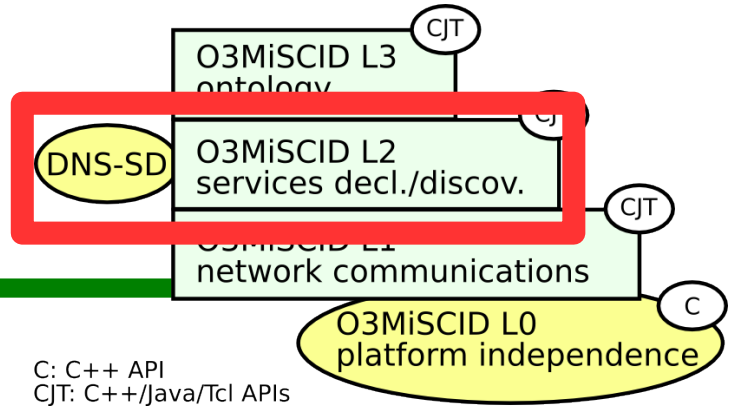

- DNS-SD over multicast DNS
  - Distributed service advertisement
  - Quick connection/disconnection notifications
- Custom filters for service selection
  - Service name, hostname, owner
  - Channel presence, channel description
  - Variable value

Example Service Discovery

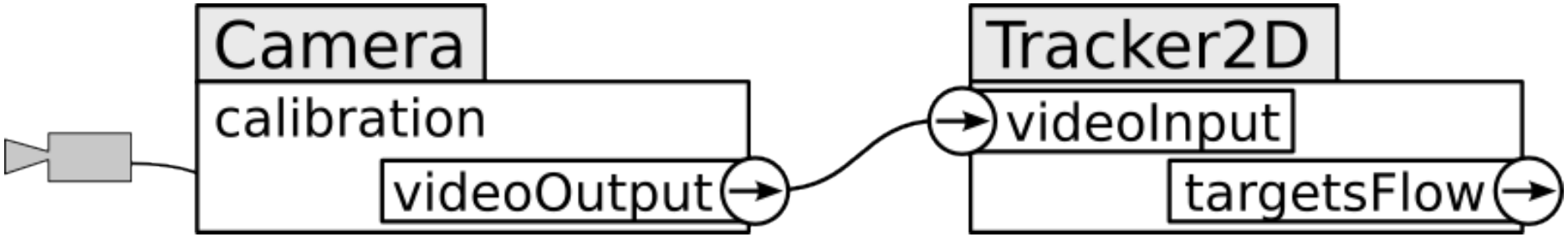


```
bipService.addConnectorListener("videoInput", this);

remoteProxy = bipService.findService(
                                and( nameIs("Camera"), ownerIs("John")));

bipService.connectTo("videoInput", remoteProxy, "videoOutput");
```

L3: Ontology

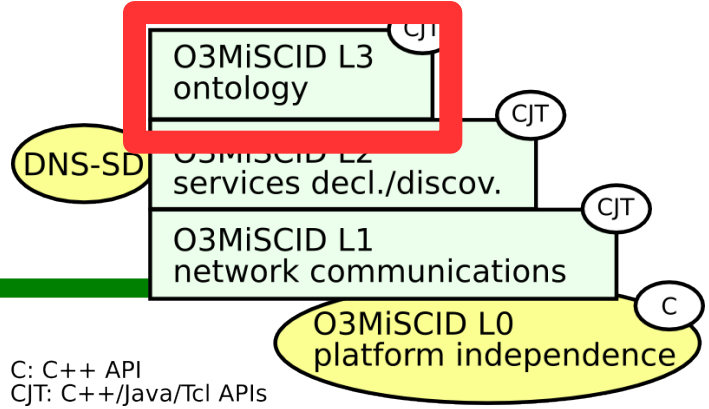

- Semantic description of services
- Simple class hierarchy
  - Single inheritance
  - Single class belonging
  - Class fields
- Service lookup based on
  - Service class
  - Service fields values

Implementation

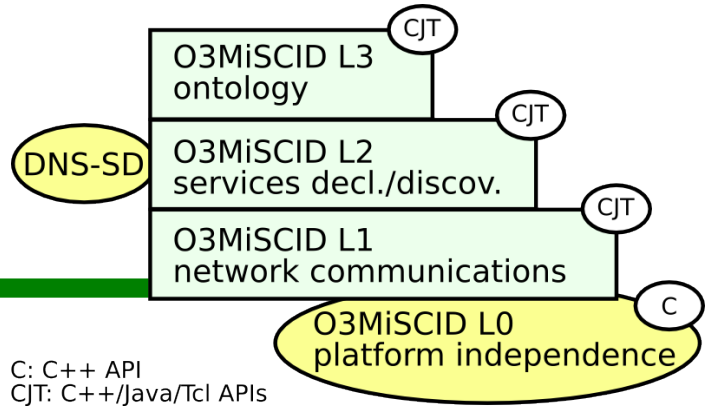

- Cross-language and cross-platform
  - Java, Osgi
  - Portable C++ (Windows, Linux, MacOSX)
  - Tcl
- APIs
  - Close to each other
  - Exploiting particularities of each language
  - User centered abstractions

Outline

- Requirements
- Middleware presentation
  - Abstract architecture
  - Detailed architecture
- <u>Examples</u>
- Conclusions

Example: Plotting Room Configuration

- Browse for interesting hardware services
- Query interesting parameters (position, orientation, ...)
- Render the room with its hardware

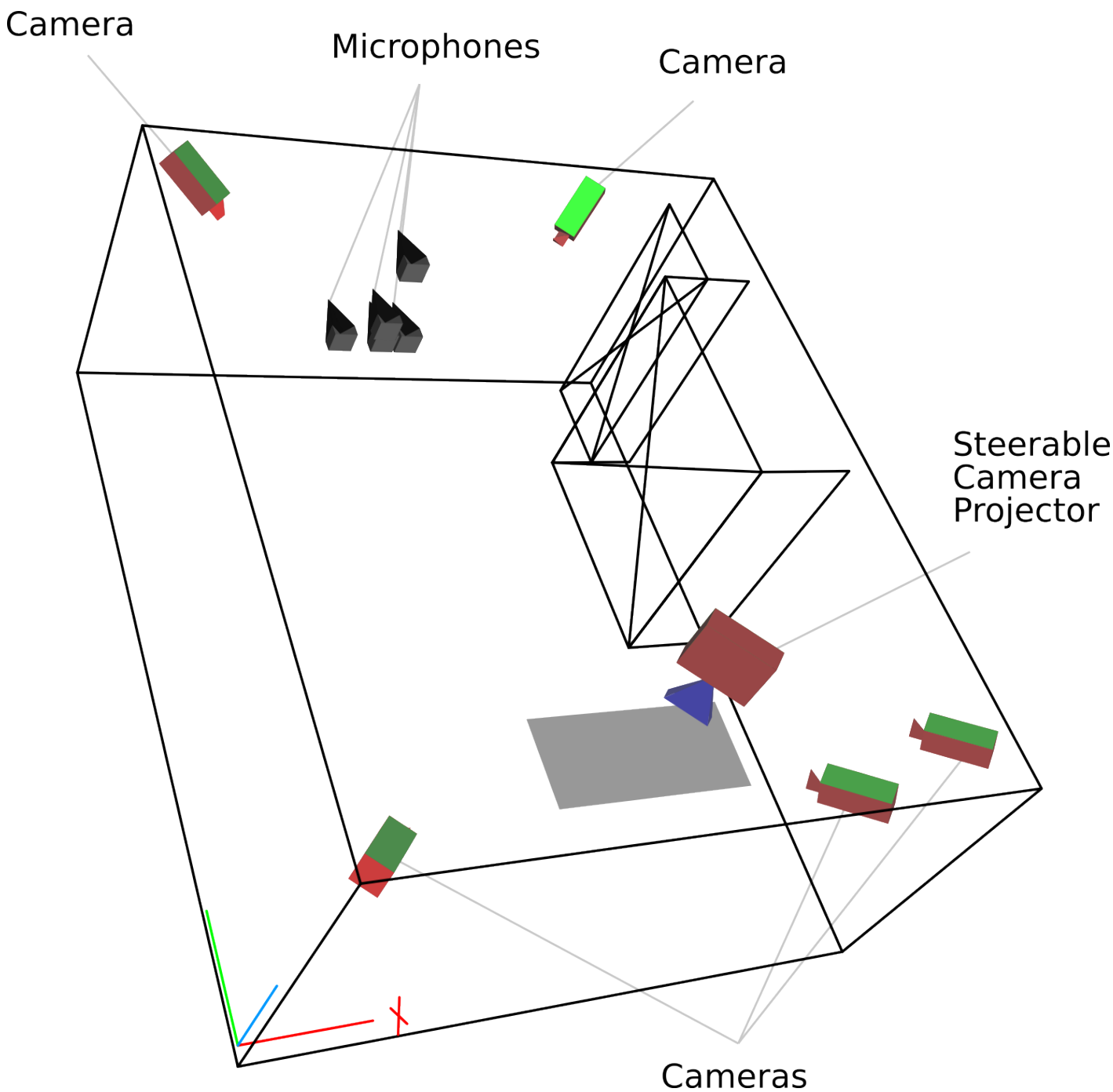
Camera
Microphones
Camera
Steerable
Camera
Projector
Cameras

Example: Automatic Cameraman

- Automatic cameraman
  - Models the evolution of a presentation
  - Chooses the appropriate point of view
  - Acts as a movie director
- Communications
  - Use O3MiSCID
  - From audio and video stream to sparse eventing

Automatic Cameraman

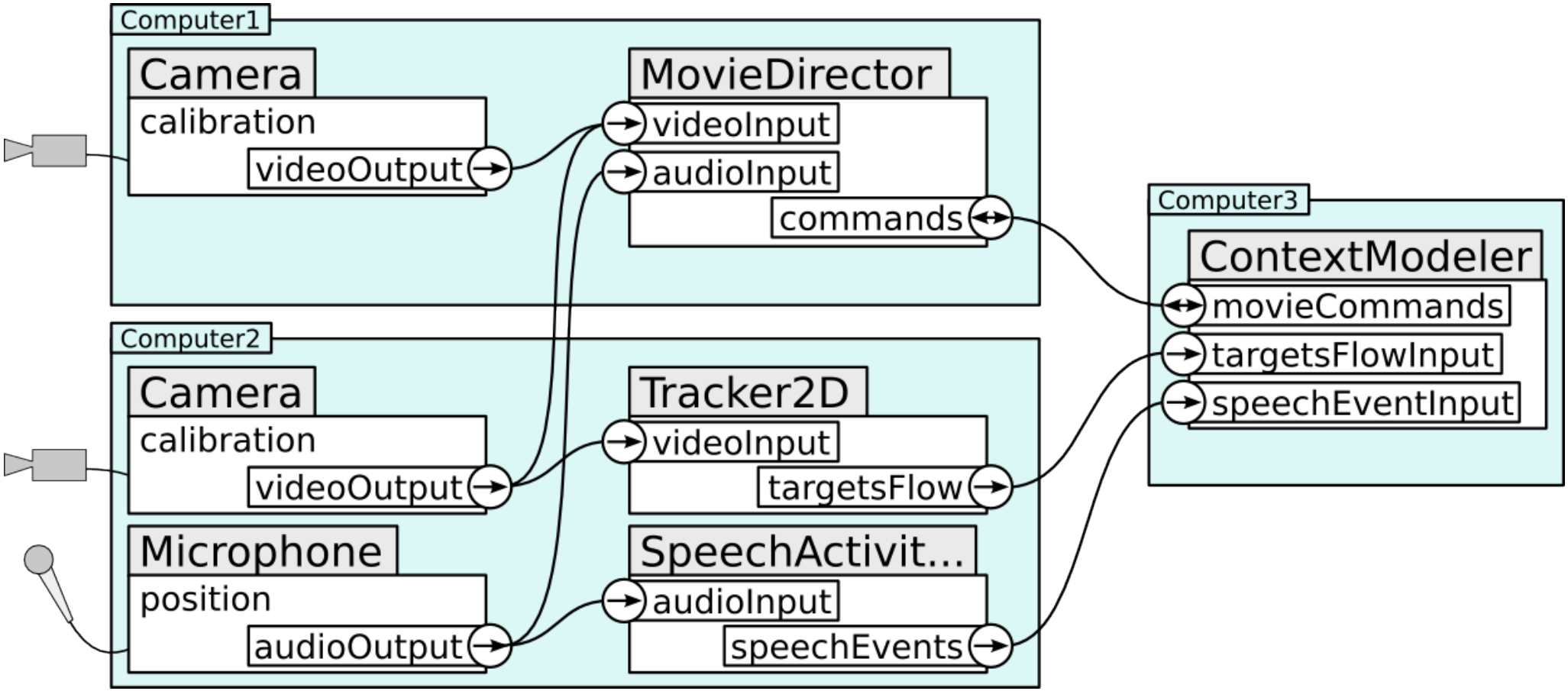

Example: System Monitoring

- Browse for interesting services
- Inspect their interconnections
- Automatically generate a graph

System Monitoring

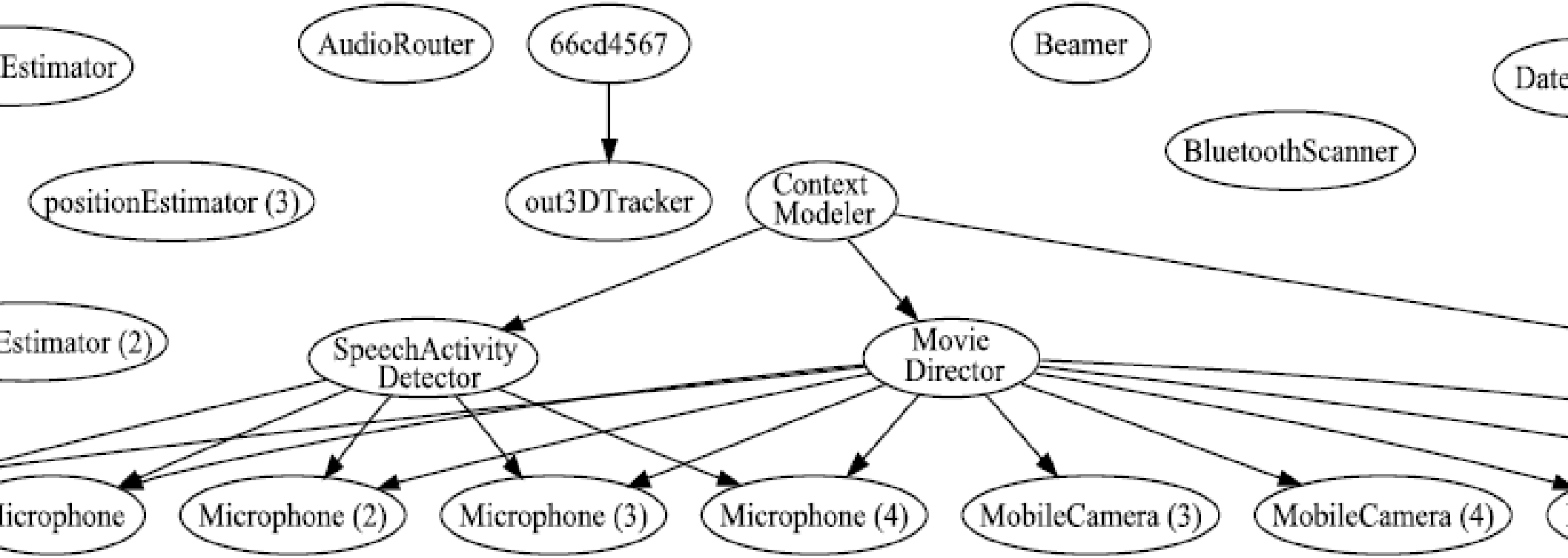

Outline

- Requirements
- Middleware presentation
  - Abstract architecture
  - Detailed architecture
- Examples
- <u>Conclusions</u>

Conclusions

- Motivations
  - Stimulate synergy in/between research teams
  - Simplify distributed application design
- Layered architecture
  - L1: Network communications
  - L2: Services declaration and discovery
  - L3: Semantic service description

Conclusions (Cont'd)

- Implementation
  - User centered design (ease of use, high availability)
  - Open source release (soon publicly available)
    - Source code, tutorials
- Status
  - Upper layer (L3) is work in progress, lower ones are stable
  - Good adoption rate, used in 4 research teams
- Good base for higher level works

Thank You For Your Attention

QUESTIONS?

Rémi Emonet
Dominique Vaufreydaz
Patrick Reignier
Julien Letessier

…

Future “engineering” work

- Performance optimizations in particular cases
  - Shared memory use on local machine
  - Direct method calls
    between services running in a same Java Virtual Machine
  - Generalized proxy architecture
- Other implementations
  - .Net implementation (C#)
  - Python implementation (and JSR223?)

Generalized Proxy Architecture

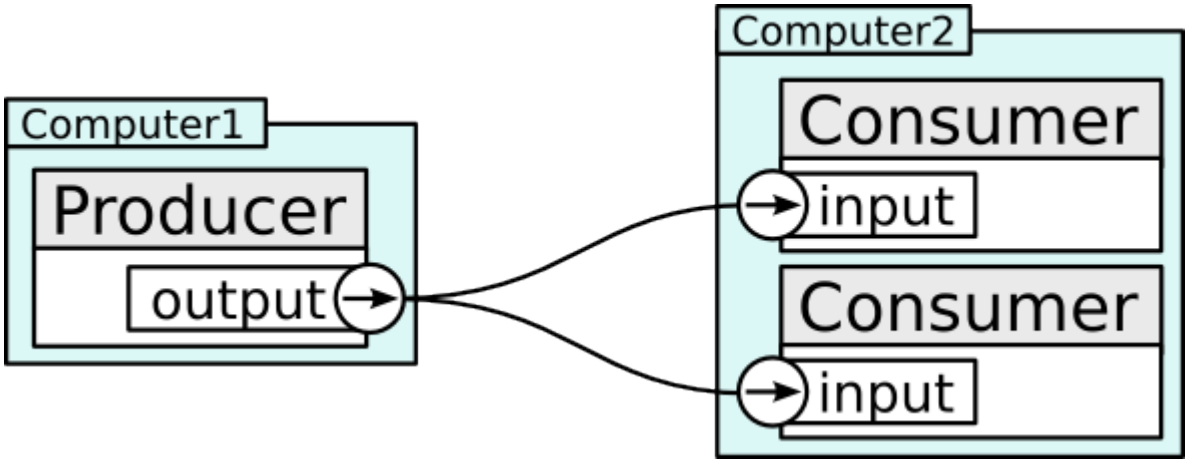

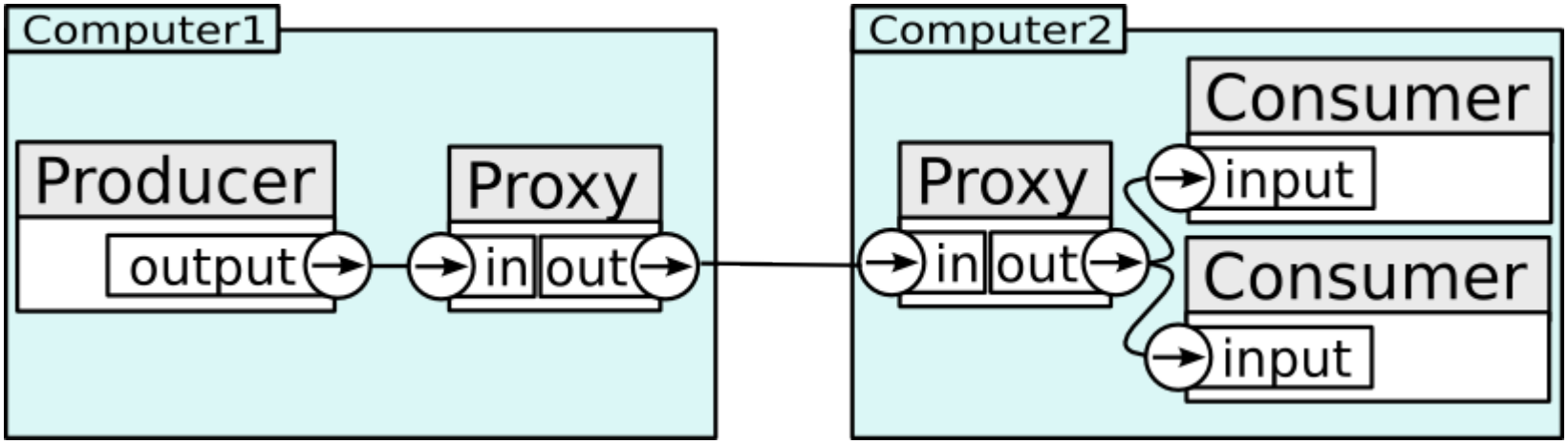

Why a custom solution?

- Attractiveness for everyone
  - Simple networking concepts
  - Low threshold
  - Availability in various platform and languages
- Technical requirements
  - Bidirectional, low latency, high bandwidth communications
  - Quick service connection/disconnection notifications

Real Applications

- Steerable Camera Projector pair
- 3D Tracker
- Interaction groups detector
- User level services
- Mapping project
- ...

…